SSC - Smart Speed Control Wiring Diagram

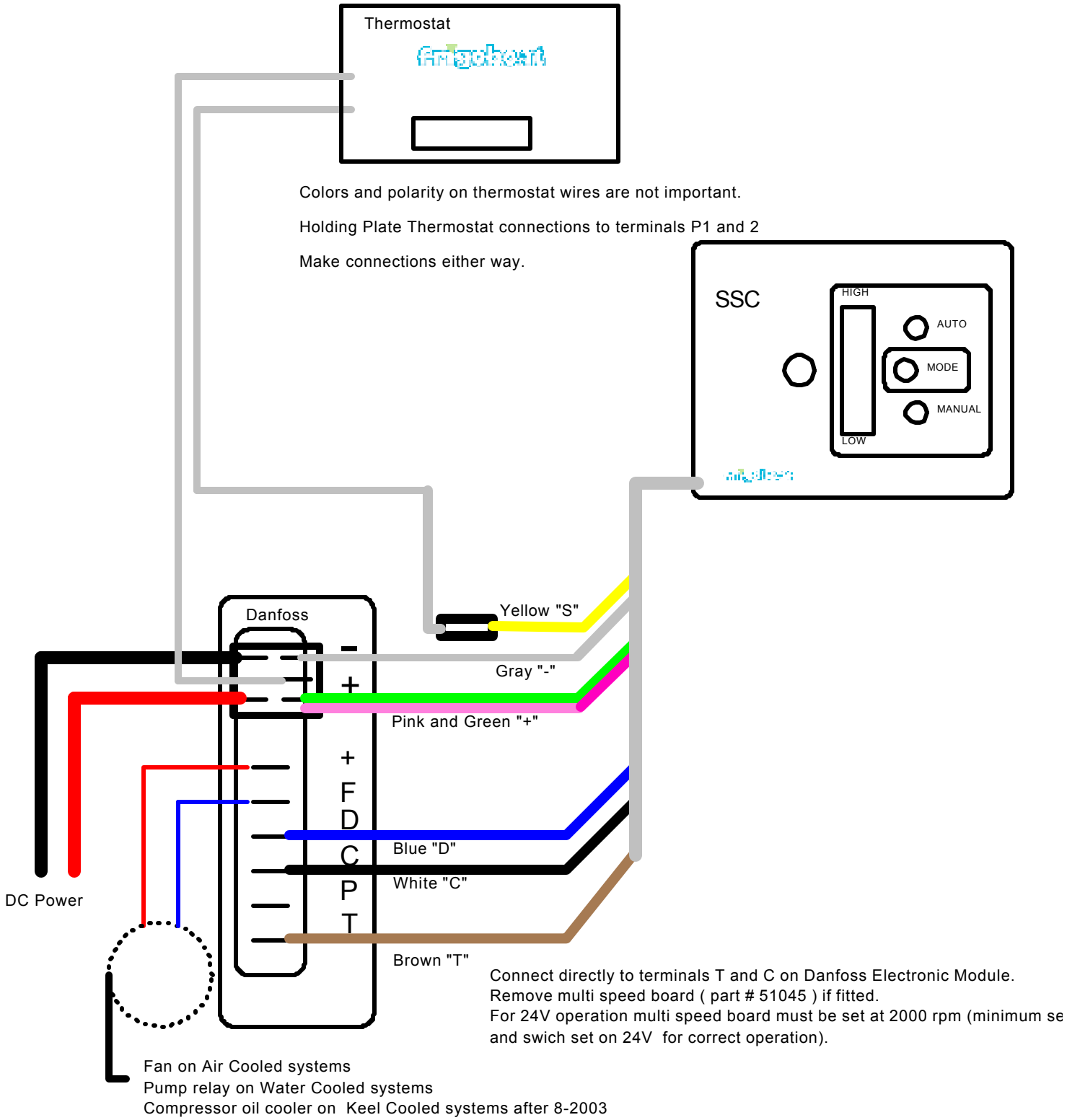

GREAT WATER, INC.
MARINE SYSTEMS

GREAT WATER, INC.
14 Maine Street, Box 34, Brunswick, ME 04011
Tel: (207) 729-8500 Toll free: (866) 209-6132
Fax: (517) 813-6509 Contact: info@great-water.com
Visit our website: www.great-water.com